PRABHAT INDIA

J-4, Panki Site 3rd Industrial Area
Kanpur -208022, (U.P.) India

Prabhat India one of the leading MANUFACTURERS AND SUPPLIERS of Weighing Bridge. It is involved in weighing industry for more than 35 years. With a built up area of 30000 Sq feet, this fabrication unit have set up an art of manufacturing facility to manufacture structures for weigh bridges and dormant scales using Closed Orthotropic Sections.

MECHANICAL STRUCTURE FOR WEIGH BRIDGE APPLICATION

CLOSED ORTHOTROPIC BEAM

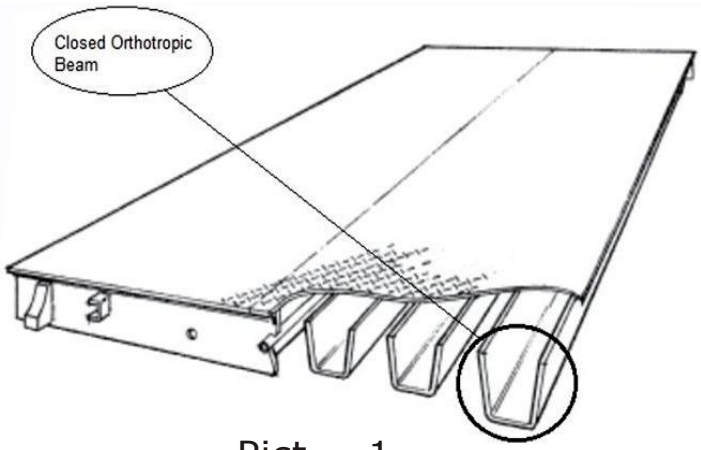

Pict. - 1

OVER BRIDGE OF DELHI METRO WITH CLOSED ORTHOTROPIC DESIGN

Pict.- 2

Initially developed by German engineers, Orthotropic design is a creative invention for weigh bridges. Orthotropic design weigh bridge structures not only offered excellent structural characteristics, but are also economical to build. Engineers from around the world utilize this practical and reliable system for all types of weigh bridges. The performance of Closed Orthotropic design weigh bridges have proven to be excessively better as compare to conventional girder based structures.

Features

Closed Orthotropic Beams

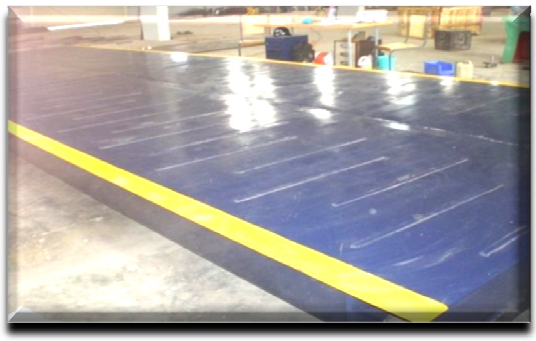

Customized orthotropic beams designed precisely for the purpose of truck scale application. These orthotropic beams are a global norm today and India - leaders like Prabhat India are aggressively using these designs across all over India.

Superior Paint

The structure incorporates epoxy based paint with dual paint coats to give a superior finish and long life to the structure to give excellent results in the long run.

Designing and Testing

Designing superior structures with precise designing using latest CAD and CAE procedures. Non Destructive Test methods are used to test the strength of each fabricated structure in actual loaded condition.

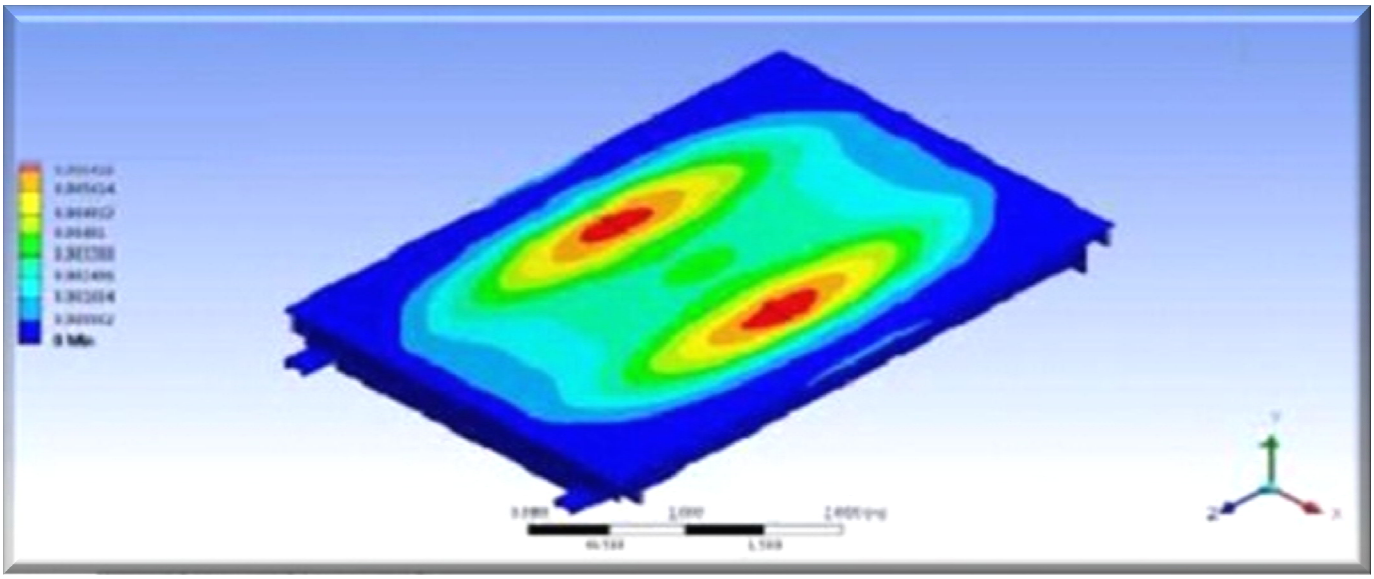

Superior Quality Material

Branded steel of SAIL / ESSAR / TATA-BSK Material with high tensile characteristic is use in fabrication. High quality mig welding is done for joining the closed orthtropic beams with top plate. This assures better performance in long run.

Fast & Easy Installation

No nut-bolts is required for joining the modules of the structure. Just need to place the modules in the column provided at the end of modules.

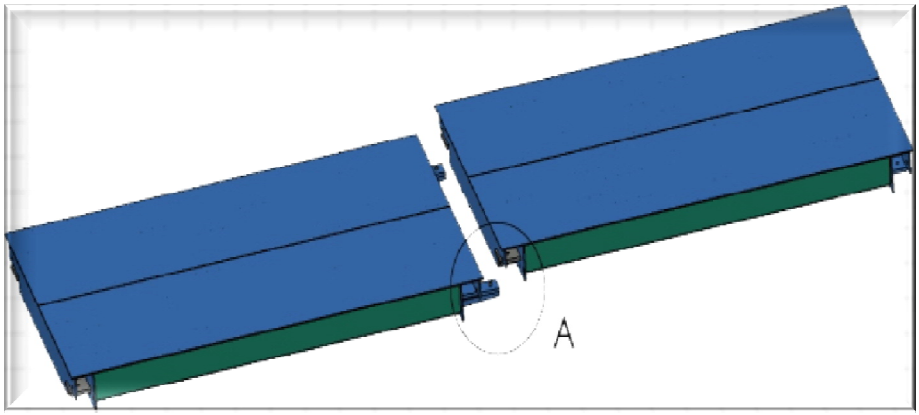

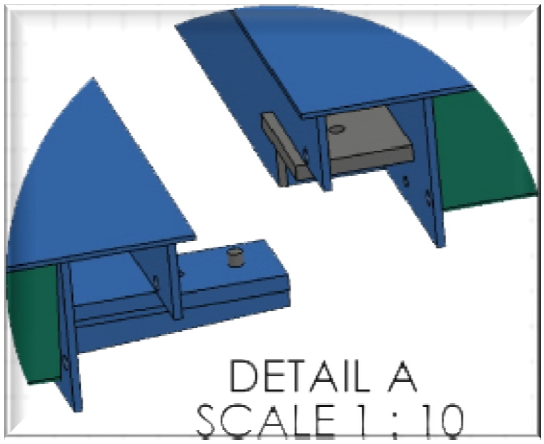

No Corrosion

Closed orthotropic design does not allows air & water to come inside, thus there is no chance of corrosion inside the beam.

Actual Pictures

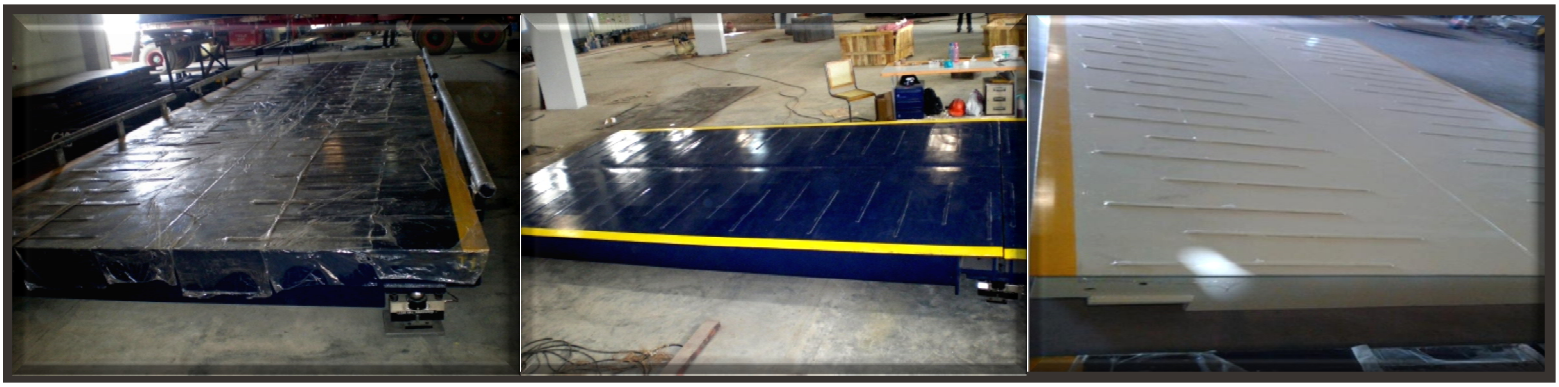

Structural Diagram

9m X 3m

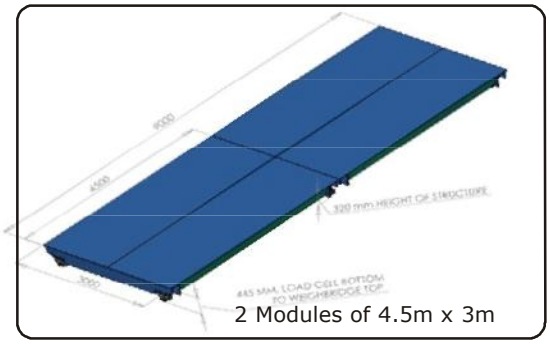

12m X 3m

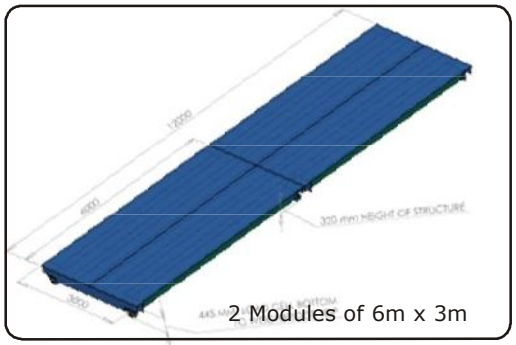

16m X 3m

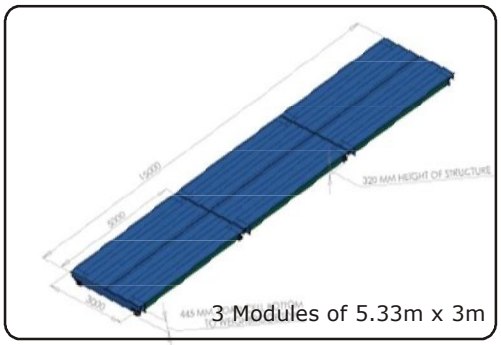

Weigh-Bridge Assembly

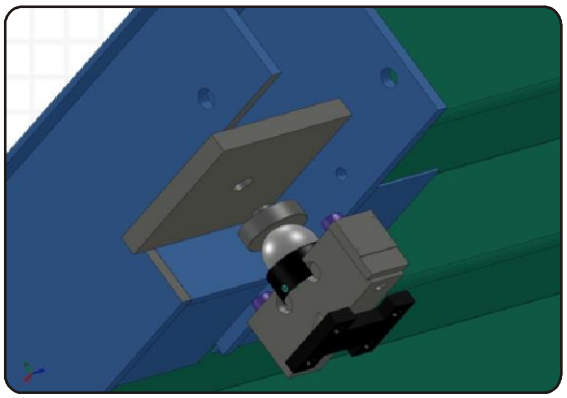

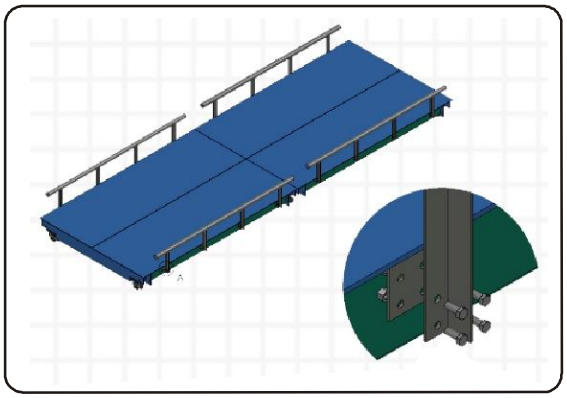

Available Sizes

S.No.	Platform Size (m x m)	Capacity (T)
1	9.0m x 3.0m	60 T
2	12.0m x 3.0m	80 /100 T
3	13.5m x 3.0m	80 /100 T

S.No.	Platform Size (m x m)	Capacity (T)
4	15.0m x 3.0m	100 T
5	16.0m x 3.0m	100/120 T
6	18.0m x 3.0m	120/200 T

Note: Customized sizes and capacities are also offered as per requirements.

Enclosures:- PRABHAT INDIA's Brochure of weigh bridge structure with closed orthotropic design.

PRABHAT INDIA
J-4 PANKI SITE 3RD INDUSTRIAL
AREA KANPUR -208022, (UP) INDIA
MO: 09839313325, 09919278568.

Page Contd.....

PRABHAT INDIA

PRABHAT INDIA is the biggest manufacturer weigh bridge in India. Weigh bridge manufacturer of Europe & America uses closed orthotropic design for weigh bridge structures. Closed Orthotropic Design is well known in the world for its strength & reliability.

PRABHAT INDIA DATABRIEF

Orthotropic Design

Closed Orthotropic-Rib Bridge Construction

Orthotropic Bridge Design

Orthotropic is a term used to describe an orthogonal-anisotropic structure. This type of structure exhibits different mechanical properties along different perpendicular axes. When used to describe a bridge structure, orthotropic simply means that the bridge's mechanical properties along the direction of travel are different from those across the width. There are several types of orthotropic designs. The one used by PRABHAT INDIA consists of a deck reinforced by closed ribs with a trapezoidal shape. A proven design that is widely used in bridge construction, it was chosen to replace the driving surface of the Golden Gate Bridge. It was also used to rebuild the infrastructure in postwar Germany. So why don't more people use it? The answer is simple: $$$. It requires a large up-front investment to produce this type of structure. Not everyone is committed to providing this level of quality.

Open Rib versus Closed Rib

There are many ways to design an orthotropic bridge section. The two most common are the open -rib deck (Figure 1) and the closed-rib deck (Figure 2). Please note that the closed-rib design is constructed of individual ribs, not a sandwich of plates and beams. The sandwich design does not offer the same structural efficiency as the closed -rib design. Although the open-rib and and closed-rib concepts are similar, the closed-rib design is significantly stronger. Let's take a look at why.

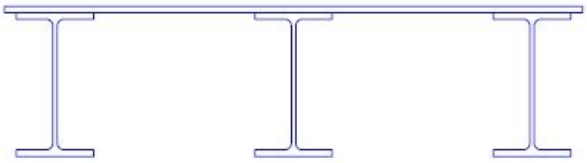

Figure 1: Open-Rib Orthotropic Design, No Load

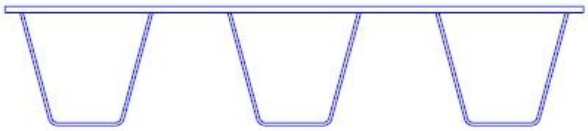

Figure 2: Closed-Rib Orthotropic Design, No Load

A truck's weight is concentrated at the load points where its tires meet the surface of the bridge. To reduce the stress at those load points, the bridge design should spread as much of the load as possible to the ribs adjacent to each load point. Because the closed-rib design is better at distributing the load across several ribs, it is stronger and more efficient.

Notice how each design reacts when a load is concentrated directly over one of the ribs (the deflections are exaggerated to show the effect more clearly). In the open-rib design (Figure 3), the I-beams adjacent to the load point are bent. Because the load is not transferred through these adjacent beams in a straight line, they support less of the load. In the closed-rib design (Figure 4), the torsional rigidity of the ribs resists the tendency of the load to deform them. As a result, the adjacent ribs provide significant support and the load is distributed more evenly across the ribs.

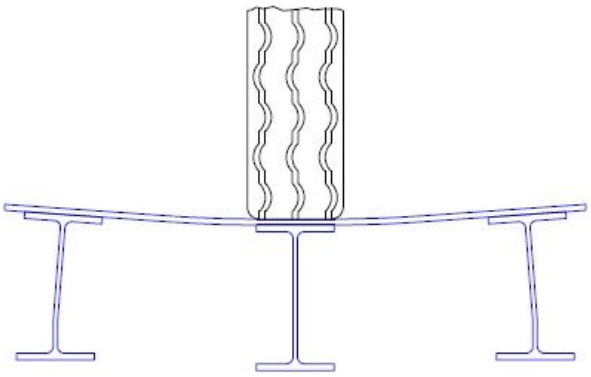

Figure 3: Open-Rib Orthotropic Design, Loaded

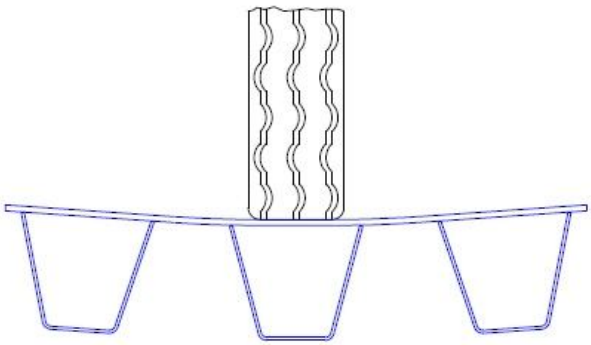

Figure 4: Closed-Rib Orthotropic Design, Loaded

Orthotropic Design

Closed Orthotropic-Rib Bridge Construction

Another benefit of the closed-rib design is that the ribs resist buckling. Figure 5 shows an open rib that is directly under the load. The beam's web can buckle to either the right or left, causing the rib to fail. To protect against buckling, you would need to add stiffeners to the beam. Figure 6 shows one leg of a closed rib and the direction in which it will always tend to buckle. Figure 7 shows a closed rib with a trapezoidal design. Since each leg tends to buckle toward the inside of the rib, the two forces act against each other. The flat section connecting the two legs transfers the load from one leg to the other, eliminating the possibility that the rib's legs will buckle. What if the closed rib were square (Figure 8) instead of trapezoidal? As with the I-beam design, the legs can buckle in either direction. The flat bottom of the rib is less effective because both legs could fail in the same direction, causing the rib to collapse.

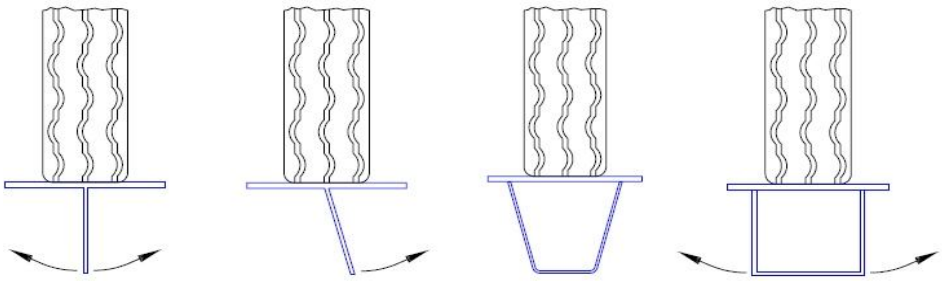

Figure 5 Figure 6 Figure 7 Figure 8

It is difficult to analyze the actual strength of an orthotropic bridge structure. The calculated strength is usually a small factor of the actual strength. Tests have shown that the actual strength of the open-rib design is 10.3 times greater than the computed strength. Similar testing on the closed-rib design could not be completed because the test equipment failed at 42 times the computed strength (Design Manual for Orthotropic Steel Plate Deck Bridges , American Institute of Steel Construction, 1963, pp.19-20).

PRABHAT INDIA Closed Orthotropic Rib

The PRABHAT INDIA closed-rib orthotropic steel deck design offers several other advantages. The three main ones are aimed at extending the life of the scale by reducing metal fatigue and internal corrosion.

1. The closed-rib design resists metal fatigue because there are no welds in the areas of the bridge that experience the greatest stress. The welds are located as close as possible to the neutral axis. What is the neutral axis? When a vehicle is driven onto a scale module, the module bends. Its top surface is pushed together (placed in compression), and its bottom surface is pulled apart (placed in tension). As you move downward from the top surface, the amount of compression decreases. As you move upward from the bottom surface, the amount of tension decreases. At some point near the center of the structure, the stress point is Zero (it is in neither compression nor tension). This point is called the neutral axis. The actual position of the neutral axis will vary, depending on the geometry of the module. In the closed-rib design, the neutral axis is closer to the top surface of the deck (Figures 9 and 10). The greatest stress is at the surface that is farthest from the neutral axis, in this case the bottom of the rib. The welds are located in the lower stress region where the ribs meet the underside of the deck plate, near the neutral axis and far from the bottom of the rib.

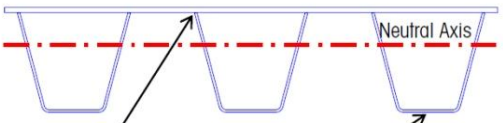

Figure 9: Scale Cross Section

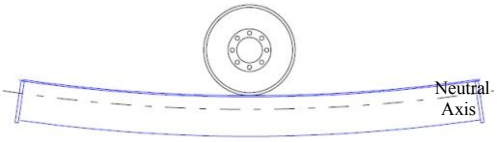

Figure 10: Scale Side View

2. The design also reduces metal fatigue by using continuous welds to join the rib to the deck plate. A start or stop in a weld increases local stresses and the potential for failure. For this reason, we do not use intermittent welds.

3. The closed-rib design helps extend the life of the scale by reducing the possibility of Internal corrosion. Each rib is completely sealed to limit the amount of moisture inside the rib chamber. Once the small amount of moisture sealed inside the rib has reacted with the metal to form iron oxide (rust), the rusting process stops. Since no more moisture can penetrate the chamber, there is no possibility of the scale rusting from the inside out.

PRABHAT INDIA has invested the time and money to develop and manufacture the industry's premier vehicle scale weighbridge. If you have questions about our weighbridges or about any of the information in this data sheet, please do not hesitate to contact us for clarification.

Closed Orthotropic Ribs

Designed to Perform

When engineers design bridges, their goal is to provide a structure that will be strong enough to meet the needs of public safety and reliable enough to last for many years. Weighing bridges should be designed to meet the same goal, but that is not always the case.

An orthotropic design with closed trapezoidal ribs is an increasingly popular choice for bridges. This type of design has proven to meet the highest performance requirements. For obvious reasons, structural bridge engineers are extremely concerned with the overall safety, robustness, reliability, and longevity of their designs. But they are also compelled to meet those objectives as efficiently as possible.

Closed-rib orthotropic designs have been used for many bridges around the world, including the Millau Viaduct in France, the Severn Crossing in the United Kingdom, the West Gate Bridge in Australia, and the bridges in the San Francisco Bay Area. In the United States, orthotropic bridges are often used when replacing a failed I-beam design, such as the Minneapolis I-35W Bridge replacement, or when upgrading bridges, such as the deck replacement of the Golden Gate Bridge in 1985.

Minneapolis I-35W Bridge replacement uses a closed orthotropic rib to support the deck. This design was chosen after the previous I-beam bridge collapsed in 2007. (Photo courtesy of http://www. Nytimes.com/ imagepages/2008/ 06/08/us/08bridgex.ready.html)

The new San Francisco Bay Bridge uses closed orthotropic ribs similar to the ribs used in our weighing bridges.

What do those bridges have in common with weighing bridges?

Both types of structures must support millions of vehicles that travel over a large span. The only difference between the purpose of a standard bridge and a weighing bridge is that a weighing bridge has the additional technology to weigh the vehicles that travel over it. Since the long-term requirements for bridges and weighing bridges are the same, doesn‘t it make sense to use the same efficient, closed-rib orthotropic design for both?

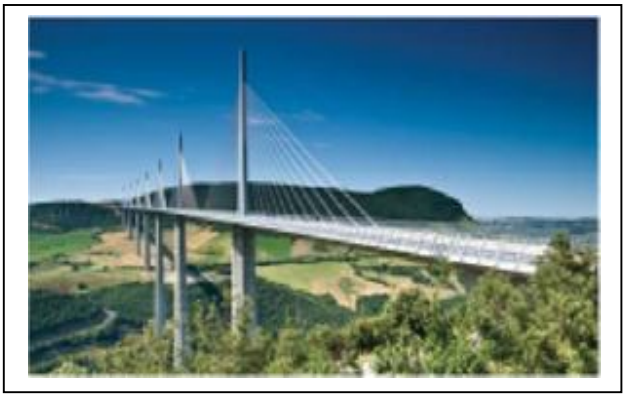

The Millau Viaduct in France relies on orthotropic ribs for its structural support.

Vehicle Scale

Orthotropic designs are also used for other structures that require strength, reliability, and durability. These include many new highway overpasses, including the famous High Five interchange in Dallas, Texas, and the support ribs used for most large haul trucks and off road quarry vehicles.

Orthotropic ribs are used in the High Five interchange in Dallas,Texas.

PRABHAT INDIA is the only weighing bridge manufacturer that uses the same type of structure that bridge designers around the world have chosen for its proven ability to stand the test of time. Don‘t you want this kind of reliability in your next vehicle scale?

Let smart bridge design guide your next Weighing bridge decision. Only one manufacturer can meet the highest standards. Choose PRABHAT INDIA for your next Vehicle scale.

PRABHAT INDIA weighing bridges use a closed- rib orthotropic design.

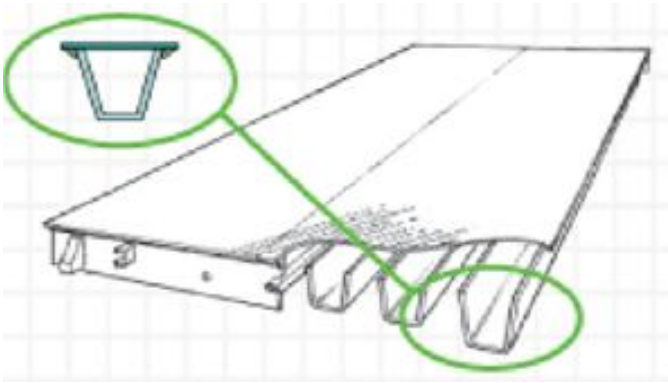

The orthotropic ribs of the PRABHAT INDIA design run the entire length of the scale.

PRABHAT INDIA (An ISO 9001: 2008 Certified Co.)
J-4 Panki Industrial Area
Site 3rd, Kanpur -208022 (UP) India
MO:-+91-9839313325, +91-9919278568
Subject to technical changes
Email:- prabhatindiakanpur@gmail.com
prabhat.tiwari7@rediffmail.com

For more information

www.prabhatindia.in

Quality*Performance*Service

A Preferred Name In Electronic Lorry Weigh Bridge Technology